『Silence』

Coffee Maker System

Software Modeling and Analysis

Team Project #2

OSP 2130 OOAD

Team 4

200611450 강세용

200611458 김영승

200611518 조민경

Phase 2130 Analyze

2131. Define Essential Use Cases

1. Add Employee

Use Case	1. Add Employee
Actor	None or Manager
Purpose	add new employee
Overview	
Type	Primary and Essential
Cross Reference	System Function: R1.1.1 Use Case : -
Pre-Requisite	N/A
Typical Courses of Event	(A) : Actor, (S) : System 1. (A) request add employees information 2. (S) check employees information 3. (S) give id number to employee 4. (S) add employees information to Database
Alternative Courses of Event	N/A
Exceptional Courses of Event	Line 1: If invalid employee information is entered, indicate an error.

2. Delete Employee

Use Case	2. Delete Employee
Actor	None or Manager
Purpose	Delete employee
Overview	
Type	Primary and Essential
Cross Reference	System Function: R1.1.2 Use Case : -
Pre-Requisite	Employee should be exists in the system.
Typical Courses of Event	(A) : Actor, (S) : System 1. (A) fire Employee. 2. (A) delete employee's id 3. (S) delete employees information to Database
Alternative Courses of Event	N/A
Exceptional Courses of Event	Line 1: If invalid employee information is entered, indicate an error.

3. Employee Modification

Use Case	3. Employee Modification
Actor	None or Manager
Purpose	Change Employee's information
Overview	
Type	Primary and Essential
Cross Reference	System Function: R1.1.3 Use Case : -
Pre-Requisite	Employee should be exists in the system.
Typical Courses of Event	(A) : Actor, (S) : System 1. (A) need change to employee's information. 2. (A) insert employee's changed information. 3. (S) change employees information to Database
Alternative Courses of Event	N/A
Exceptional Courses of Event	Line 1: If invalid employee information is entered, indicate an error.

4. Recipe Add

Use Case	4. Recipe Add
Actor	Manager
Purpose	Adding the recipe into the recipe list
Overview	If manager want to add the new recipe, system should be provide add recipe menu into coffee maker.
Type	Primary and Essential
Cross Reference	System Functional : R1.2.1 Use Case : -
Pre-Requisites	N/A
Typical Courses of Events	(A) : Actor, (S) : System 1. (A) A manager requests add recipe. 2. (S) Check the existence recipe and show the lists. 3. (A) Input the recipe data. 4. (S) Check if corresponding recipe exists. 5. (S) Add recipe date to list.
Alternative Courses of Events	N/A
Exceptional Courses of Events	Line 1: If invalid recipe information is entered, indicate an error.

5. Recipe Delete

Use Case	5. Recipe Delete
Actor	Manager
Purpose	Delete the recipe into the recipe lists.
Overview	If manager want to delete recipe, systems should be check recipe list and delete the recipe.
Type	Primary and Essential
Cross Reference	System Function : R1.2.2 Use Case : -
Pre-Requisites	Recipe should be exists in the list.
Typical Courses of Events	(A) : Actor, (S) : System 1. (A) A manager Inputs a recipe title. 2. (S) Check if a corresponding recipe in the list. 3. (S) Delete the recipe in the list.
Alternative Courses of Events	N/A
Exceptional Courses of Events	Line 1: If invalid recipe information is entered, indicate an error.

6. Recipe Modification

Use Case	6. Recipe Modification
Actor	Manager
Purpose	Modify the recipe into the recipe list.
Overview	If manager want to modify the recipe, system should be check recipe list and provide recipe modifying menu.
Type	Primary and Essential
Cross Reference	System Function : R1.2.3 Use Case : -
Pre-Requisites	Recipe should ne exists in the list.
Typical Courses of Events	(A) : Actor, (S) : System 1. (A) A manager Inputs a recipe title. 2. (S) Check if a corresponding recipe in the list. 3. (S) Show the recipe data and provide modify menu. 4. (A) Input the change recipe. 5. (S) Save the modified recipe.
Alternative Courses of Events	N/A
Exceptional Courses of Events	Line 1: If invalid recipe information is entered, indicate an error.

7. Add Table

Use Case	7. Add Table
Actor	Manager
Purpose	Add Table in Store.
Overview	
Type	Primary and Essential
Cross Reference	System Function: R1.3.1
Pre-Requisite	
Typical Courses of Event	(A) : Actor, (S) : System 1. (A) bought a big table 2. (A) insert new table's information. 3. (S) checked new table's info 4. (S) give table-id to new table 5. (S) add new table's information to Database
Alternative Courses of Event	N/A
Exceptional Courses of Event	Line 1: If invalid table information is entered, indicate an error.

8. Delete Table

Use Case	8. Delete Table
Actor	Manager
Purpose	Delete Table in Store.
Overview	
Type	Primary and Essential
Cross Reference	System Function: R1.3.2
Pre-Requisite	Table should be exists in the list.
Typical Courses of Event	(A) : Actor, (S) : System 1. (A) sell or ban a table 2. (A) type table-id 3. (S) checked table-id 4. (S) delete table's information to Database
Alternative Courses of Event	N/A
Exceptional Courses of Event	Line 1: If invalid table information is entered, indicate an error.

9. Table Modification

Use Case	9. Table Modification
Actor	Manager
Purpose	Change Table information
Overview	
Type	Primary and Essential
Cross Reference	System Function: R1.3.3
Pre-Requisite	Table should be exists in the list.
Typical Courses of Event	(A) : Actor, (S) : System 1. (A) change table information 2. (A) insert changed table's information. 3. (S) checked table's id 4. (S) change table's information to Database
Alternative Courses of Event	N/A
Exceptional Courses of Event	Line 1: If invalid table information is entered, indicate an error.

10. Order Coffee

Use Case	10. Order Coffee
Actors	Customer
Purpose	Order Customer’s coffee
Overview	
Type	Primary and Essential
Cross Reference	System Function: R2.1
Pre-Requisite	
Typical Courses of Event	(A) : Actor, (S) : System 1. (A) select menu on display 2. (S) save customer’s order in system
Alternative Courses of Event	N/A
Exceptional Courses of Event	N/A

11. Sequence Order List

Use Case	11. Sequence Order List
Actors	System
Purpose	Sequence an order list
Overview	
Type	Primary and Essential
Cross Reference	System Function: R2.2
Pre-Requisite	Already should save an order list
Typical Courses of Event	(A) : Actor, (S) : System 1. (S) sequence an order list 2. (S) make coffee in chronological order
Alternative Courses of Event	N/A
Exceptional Courses of Event	N/A

12. Voice Recognition

Use Case	12. Voice Recognition
Actors	Customer
Purpose	Perform voice recognition function
Overview	
Type	Primary and Essential
Cross Reference	System Function: R2.3
Pre-Requisite	N/A
Typical Courses of Event	(A) : Actor, (S) : System 1. (A) request voice recognition 2. (S) execute voice recognition. 3. (S) inform employee about recognized voice
Alternative Courses of Event	N/A
Exceptional Courses of Event	N/A

13. Voice Conversation

Use Case	13. Voice Conversation
Actors	Employee
Purpose	Play saved voice for customer
Overview	
Type	Primary and Essential
Cross Reference	System Function: R2.4
Pre-Requisite	System should have basic voice conversation
Typical Courses of Event	(A) : Actor, (S) : System 1. (A) play saved voice conversation for customer's request
Alternative Courses of Event	N/A
Exceptional Courses of Event	N/A

14. Make Coffee

Use Case	14. Make Coffee
Actor	None
Purpose	Make coffee
Overview	
Type	Primary and Essential
Cross Reference	System Function: R3.1
Pre-Requisite	Order list should be exists in the list.
Typical Courses of Event	(S) : Server (C) : Coffee maker (W) :Employee 1. (C) received (S)'s message. 2. (C) start makes coffee. 3. if (C) finished making coffee, call employee 4. (W) received coffee and press receive coffee button in iPAD.
Alternative Courses of Event	N/A
Exceptional Courses of Event	N/A

15. Call Employee(of system)

Use Case	15. Call Employee(of system)
Actor	Employee
Purpose	Call employee for bring to complete coffee
Overview	
Type	Primary and Essential
Cross Reference	System Function: R3.2
Pre-Requisite	Should finish making coffee
Typical Courses of Event	(S) : Server (C) : Coffee maker 1. If (C) finished making coffee, send message to server. 2. (S) call employee after received message 3. (W) received coffee and press receive coffee button in iPAD.
Alternative Courses of Event	N/A
Exceptional Courses of Event	N/A

16. Manager Call(of system)

Use Case	16. Manager Call(of system)
Actor	None
Purpose	Call a manager.
Overview	If lack of coffee elements and delayed response of employee, system should be call manager.
Type	Primary and Essential
Cross Reference	System Function : R3.3 Use Case : -
Pre-Requisites	N/A
Typical Courses of Events	(A) : Actor, (S) : System 1. (S) Check if lack of coffee elements. (S) Check if delayed response of employee. 2. (S) Sending to signal to manager.
Alternative Courses of Events	N/A
Exceptional Courses of Events	N/A

17. Order Inquiry.

Use Case	17. Order Inquiry
Actor	Manager
Purpose	Inquire the whole order list each employee.
Overview	Manager should be check employee order state so that order to employee for ordering another work.
Type	Primary and Essential
Cross Reference	System Function : R4.1 Use Case : -
Pre-Requisites	N/A
Typical Courses of Events	(A) : Actor, (S) : System 1. (A) A manager request showing employee's order list. 2. (S) Check employee's order list. 3. (S) Show order list to manager.
Alternative Courses of Events	N/A
Exceptional Courses of Events	N/A

18. Employee Call(of manager)

Use Case	18. Employee Call(of manager)
Actor	Manager
Purpose	Call an employee of manager.
Overview	A manager should be calling an employee for ordering another work.
Type	Primary and Essential
Cross Reference	System Function : R4.2 Use Case : -
Pre-Requisites	N/A
Typical Courses of Events	(A) : Actor, (S) : System 1. (A) A manager inputs employee's id. 2. (S) Check if corresponding employee's id. 3. (S) Call an employee.
Alternative Courses of Events	N/A
Exceptional Courses of Events	N/A

19. Save Order List

Use Case	19. Save Order List
Actor	None.
Purpose	Save order list for each table of charge.
Overview	System should be save the order list each table so that provide price of each table
Type	Primary and Essential
Cross Reference	System Function : R2.1, R6.1 Use Case : "Coffee Order"
Pre-Requisites	Should order menu for each table already.
Typical Courses of Events	(A) : Actor, (S) : System 1. (S) Check if order of table. 2. (S) Ordering data save into a table order list.
Alternative Courses of Events	N/A
Exceptional Courses of Events	N/A

2132. Refine Use Case Diagrams

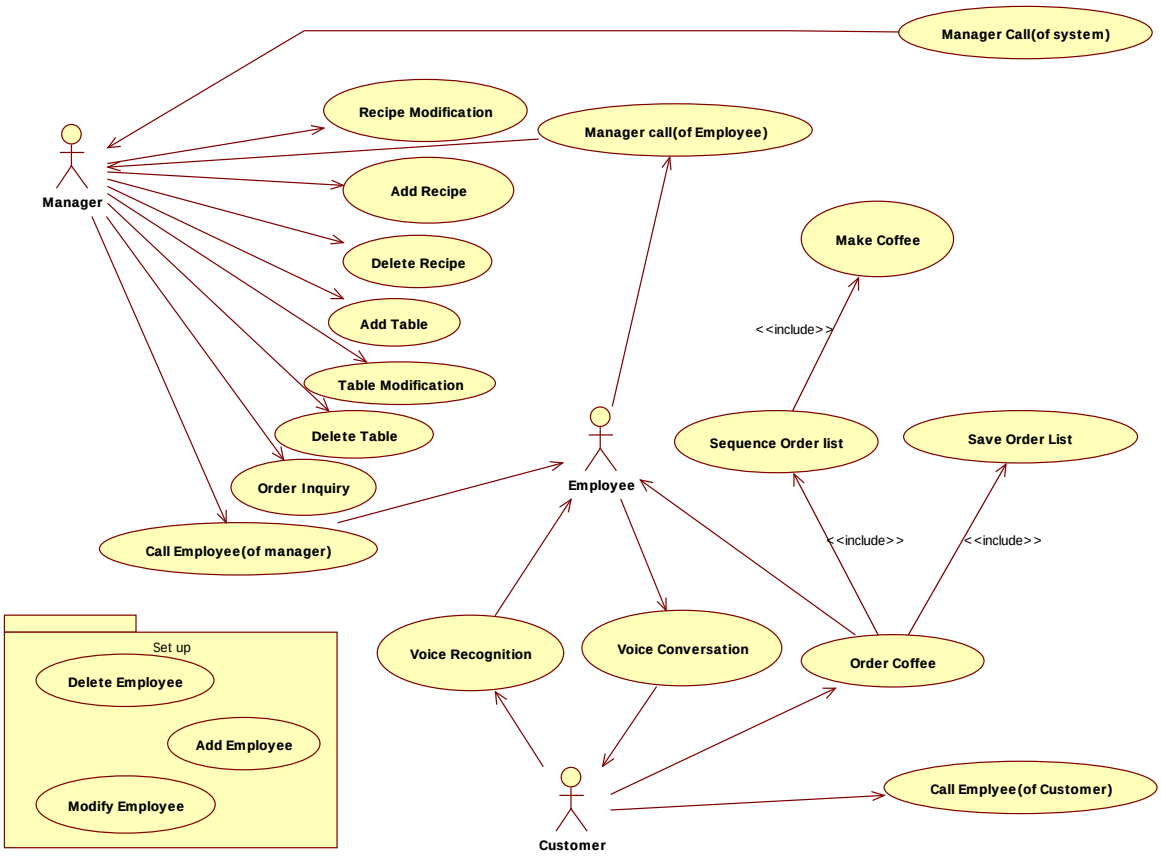

- Change 1 : Delete Use Case No.19 "Call of lack coffee elements".
  - We decide delete use-case No.18 "Call of lack coffee elements". Because we think that use-case No.18 "Employee Call" is same operation. So, we delete the use-case.

2133. Define Domain Model

Physical or tangible objects	Employee(worker, manager) , table, store , recipe, alram
Specifications, designs, or descriptions of thing	Customer, Worker , Manager, coffee
Places	Cafe
Transactions	Make Coffee, resist employee, resist recipe, resist table, calculation, using voice conversation module , call employee, using iPAD conversation.
Roles of people	Employee, Manager, Customer
Containers of other things	Cafe
Things in a container	Employee, table, store, Coffee, recipe
organizations	Cafe

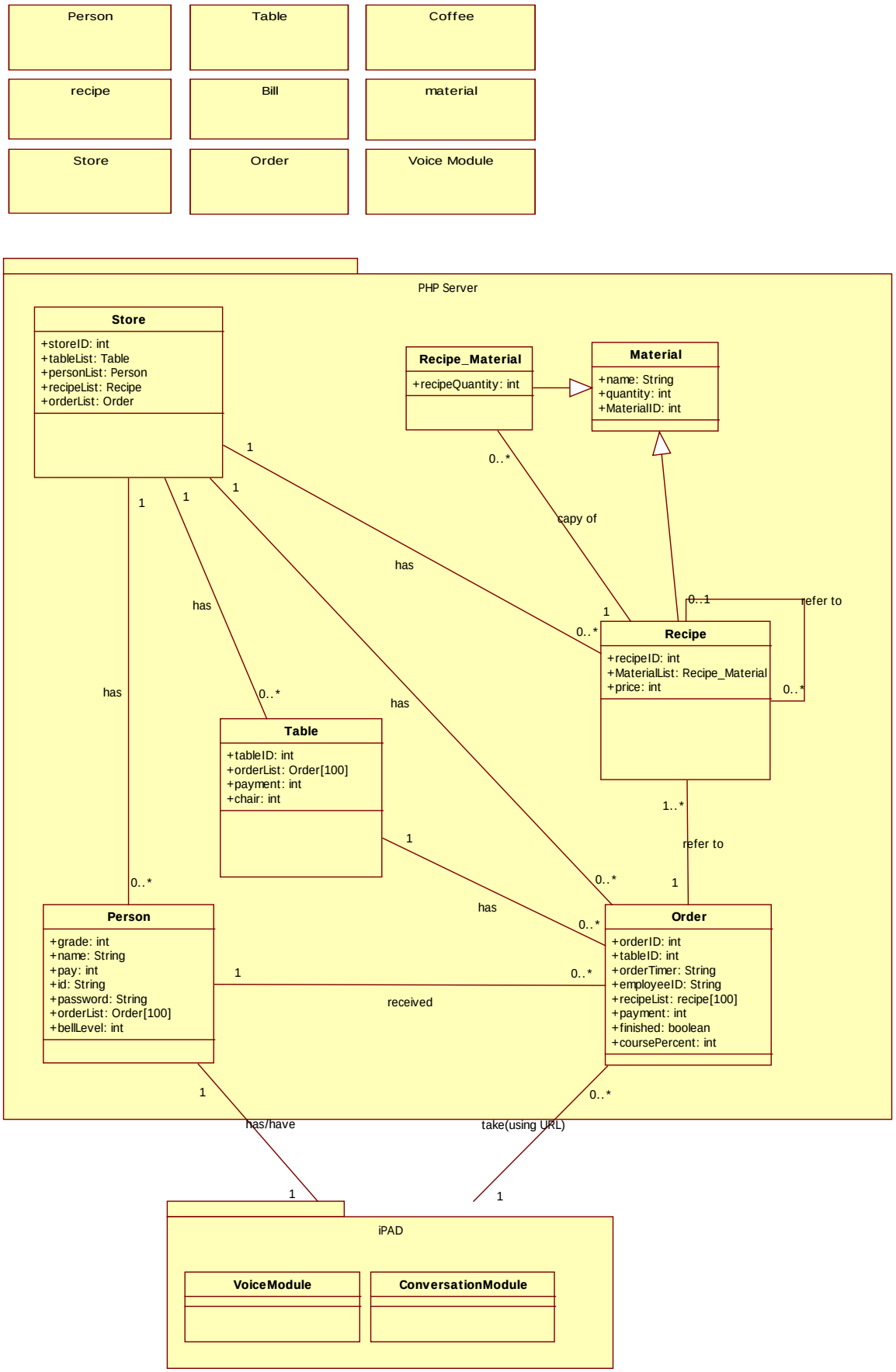
Person
Table
Coffee
recipe
Bill
material
Store
Order
Voice Module
PHP Server
Store
+storeID: int
+tableList: Table
+personList: Person
+recipeList: Recipe
+orderList: Order
Recipe_Material
+recipeQuantity: int
Material
+name: String
+quantity: int
+MaterialID: int
capy of
has
refer to
Recipe
+recipeID: int
+MaterialList: Recipe_Material
+price: int
Table
+tableID: int
+orderList: Order[100]
+payment: int
+chair: int
Person
+grade: int
+name: String
+pay: int
+id: String
+password: String
+orderList: Order[100]
+bellLevel: int
Order
+orderID: int
+tableID: int
+orderTimer: String
+employeeID: String
+recipeList: recipe[100]
+payment: int
+finished: boolean
+coursePercent: int
received
has/have
take(using URL)
iPAD
VoiceModule
ConversationModule

2134. Refine Glossary

Term	Category	Remarks
Store	Class	Cafe Main Class
Recipe_Material	Class	Material for make Recipe
Material	Class	Material Class
Recipe	Class	Sum of Recipe_Materials
Table	Class	Table Class
Person	Class	Person for employee or manager
Order	Class	Order to recipe
VoiceModule	Class	VoiceModule for employee
ConversationModule	Class	ConversationModule for customer
Store.storeID	Attribute	Unique Store id
Store.tableList	Attribute	Store's table information List
Store.personList	Attribute	Store's person information List
Store.orderList	Attribute	Store's order information List
Recipe_Material.recipeQuantity	Attribute	Quantity for making recipe
Material.name	Attribute	Material's name
Material.quantity	Attribute	Material's quantity
Material.MaterialID	Attribute	Material's unique id
Recipe.recipeID	Attribute	Recipe's unique id
Recipe.MaterialList	Attribute	Material List for Recipe
Recipe.price	Attribute	Recipe's price
Table.tableID	Attribute	Table's unique id
Table.orderList	Attribute	Order List for table
Table.payment	Attribute	Order recipe's all payment
Table.chair	Attribute	Table's chair
Person.grade	Attribute	Person's grade(employee, manager, ceo)
Person.name	Attribute	Person's name
Person.pay	Attribute	Person's pay
Person.id	Attribute	Person's unique id
Person.password	Attribute	Person's password
Person.orderList	Attribute	Person's order List
Person.belLevel	Attribute	Person's bell Level
Order.orderID	Attribute	Order's unique id
Order.tableID	Attribute	Ordered ID of table.
Order.orderTimer	Attribute	Ordered time
Order.employeeID	Attribute	ID of employee to be ordered
Order.recipeList	Attribute	Recipe list to be ordered

Order.payment	Attribute	Total price of ordered list
Order.finished		Boolean check of order finished
Order.coursePercent		Ordering state.

2135. Define System Sequence Diagrams

1. Add employee

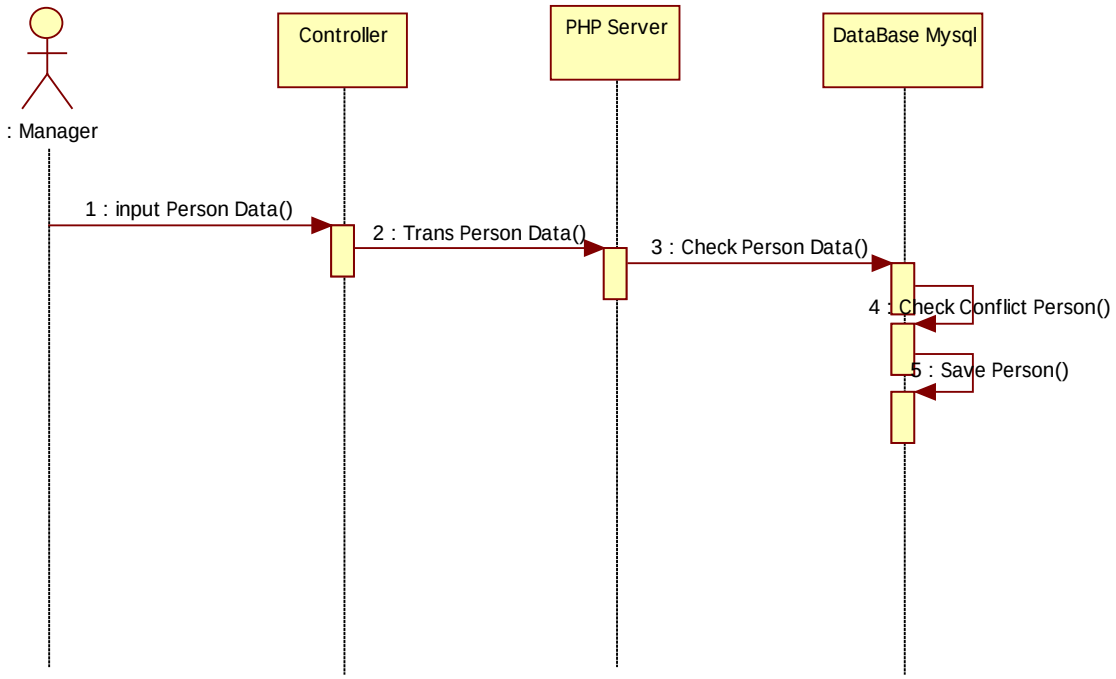

2. Delete Employee

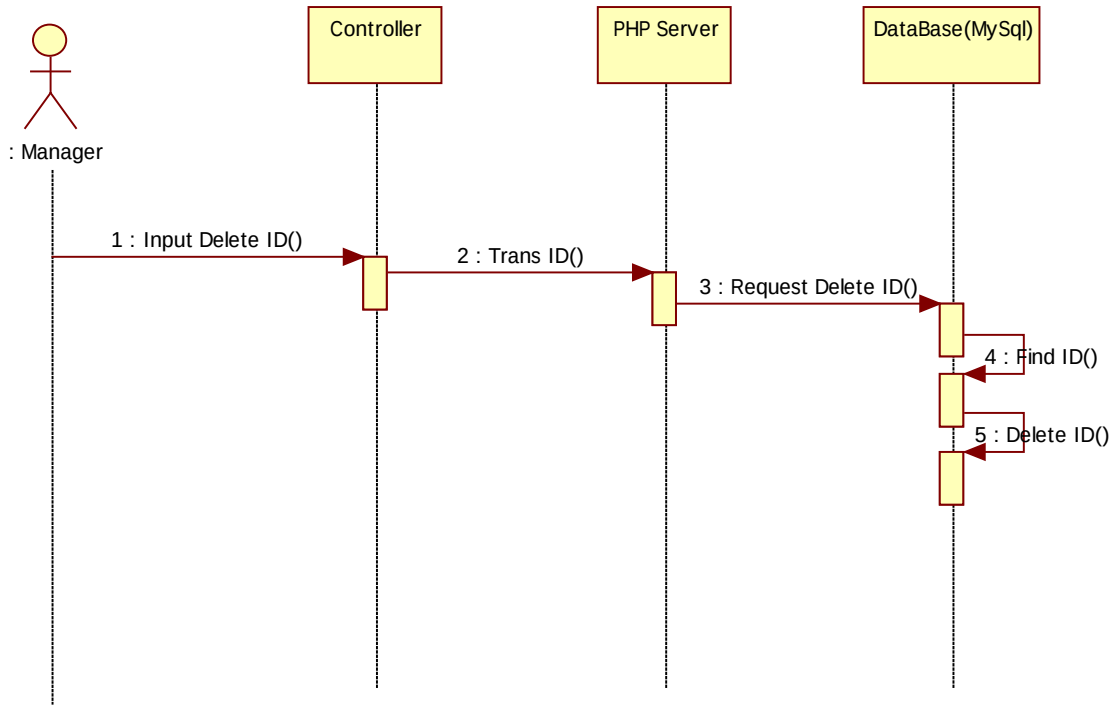

3. Modify Employee

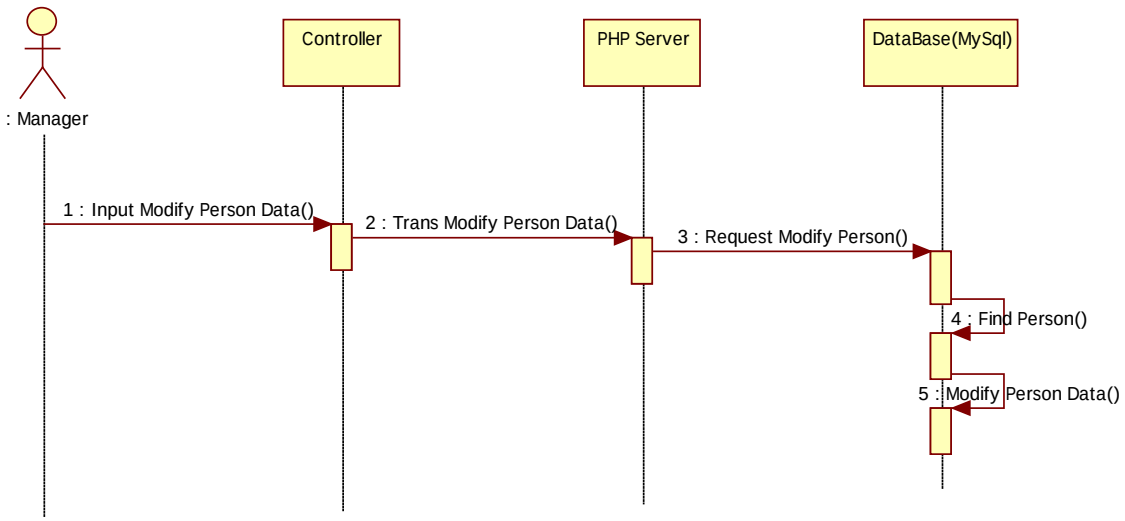

4. Add Recipe

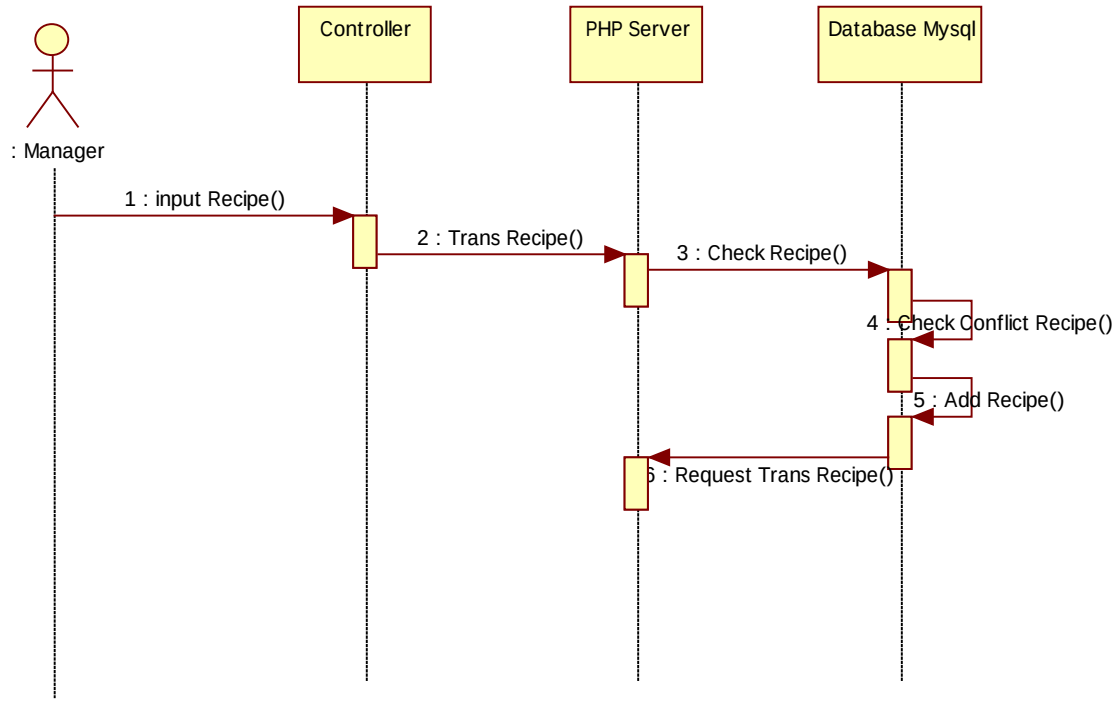

5. Delete Recipe

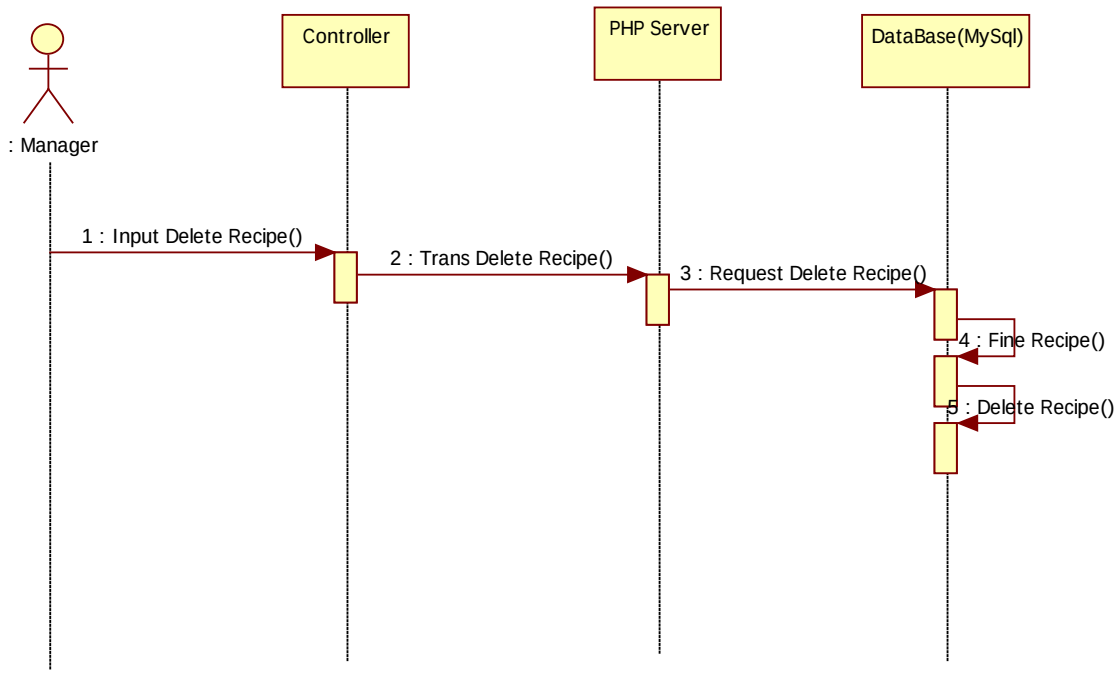

6. Modify Recipe

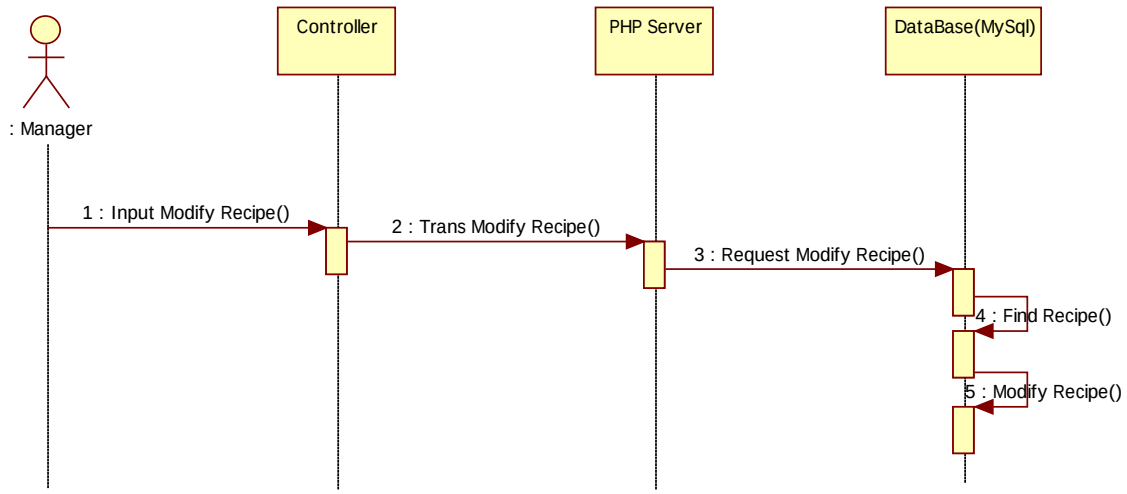

7. Add table

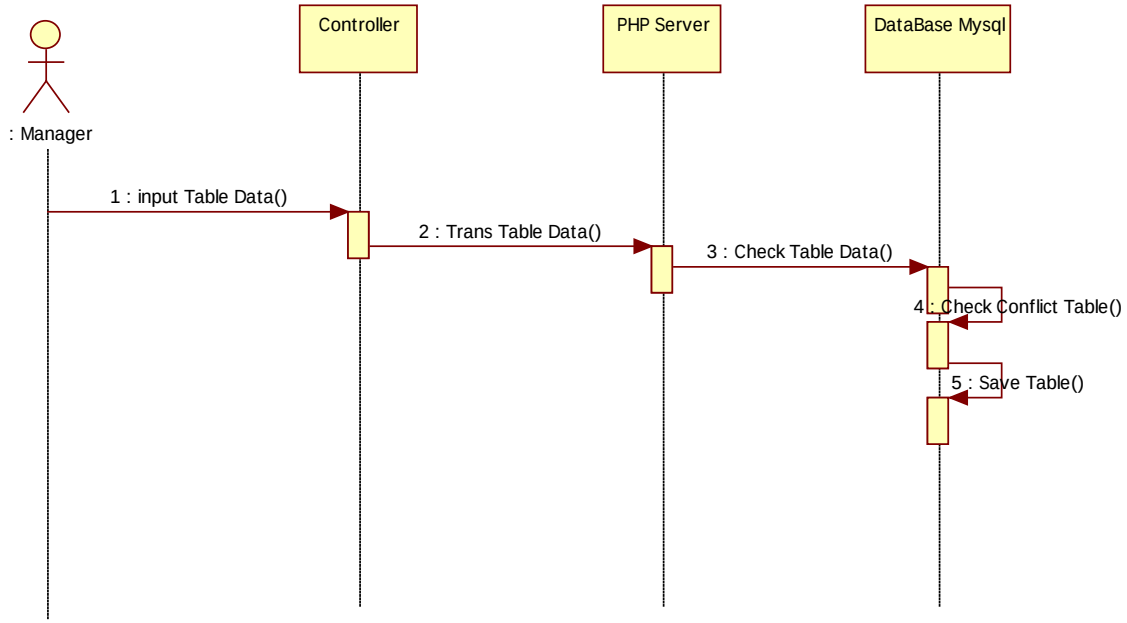

8. Delete Table

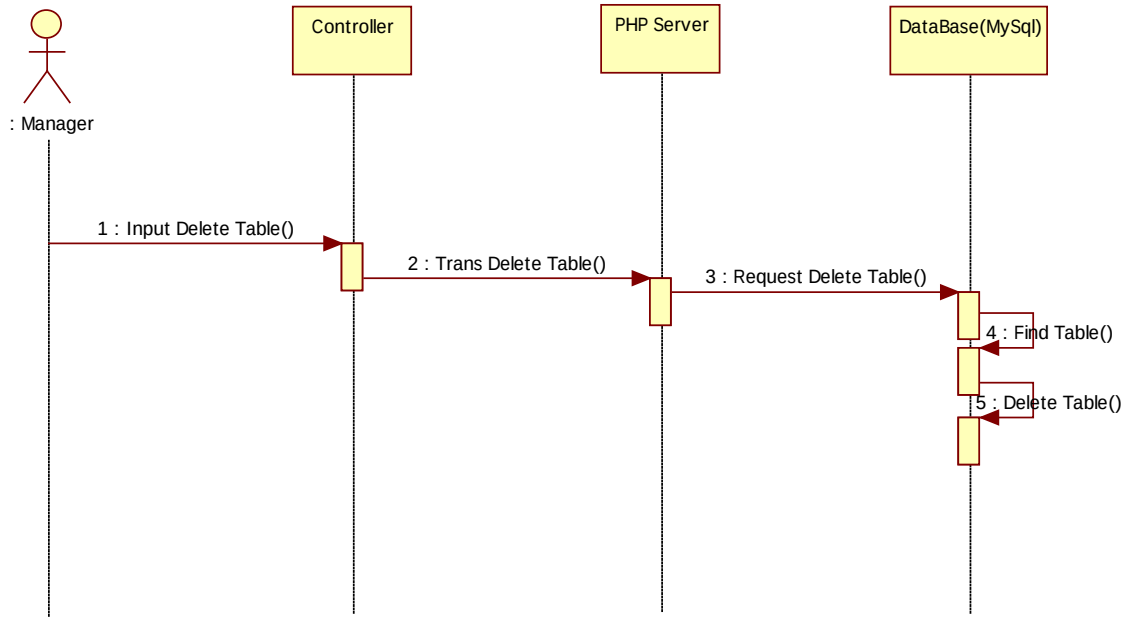

9. Modify Table

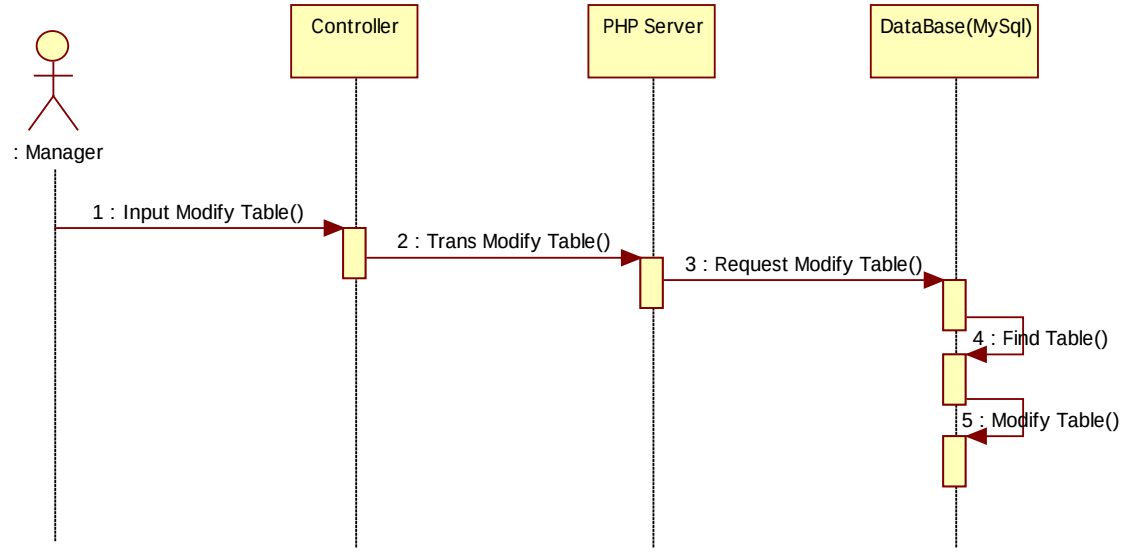

10. Order Coffee

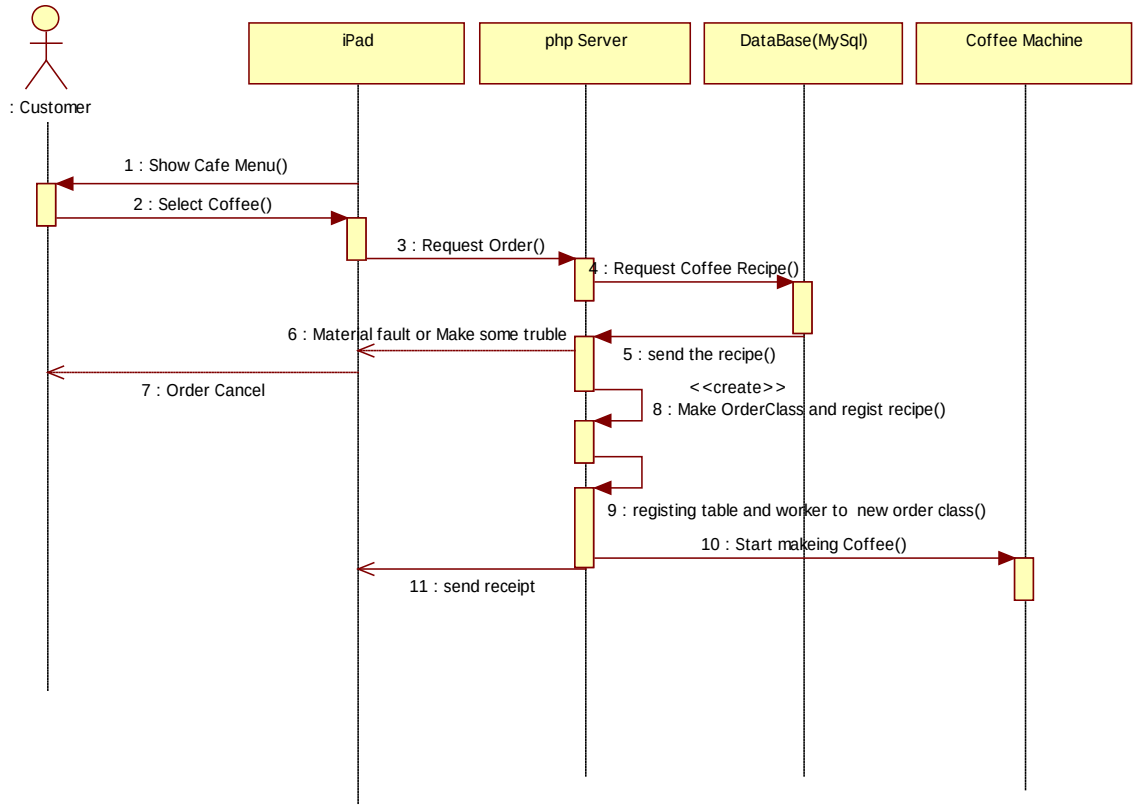

11. Sequence Order List

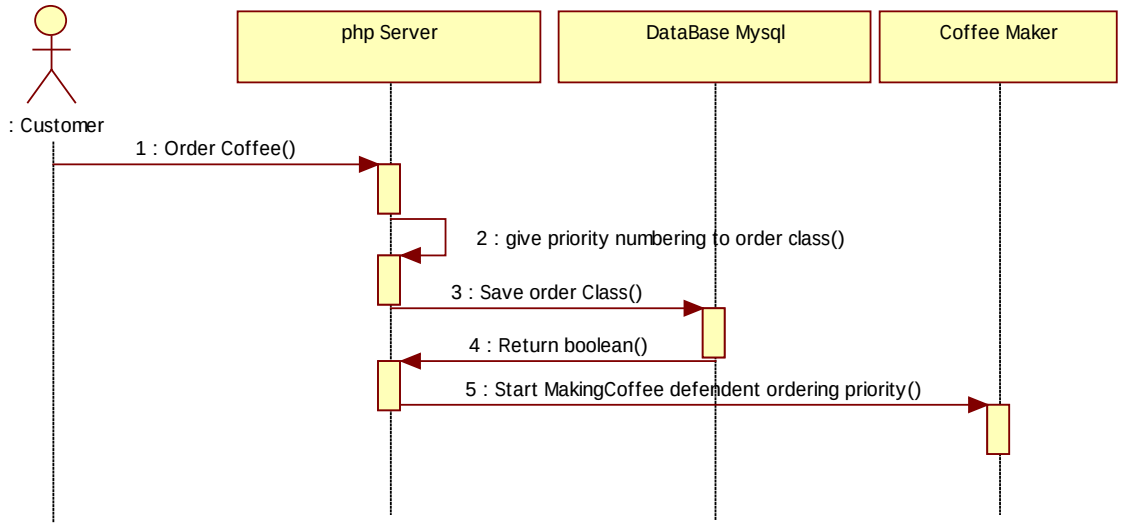

12. Voice Recognition

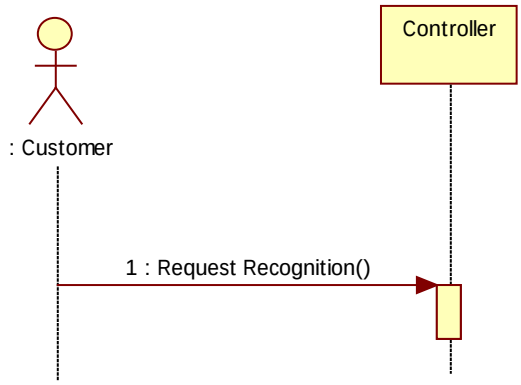

13. Voice Conversation

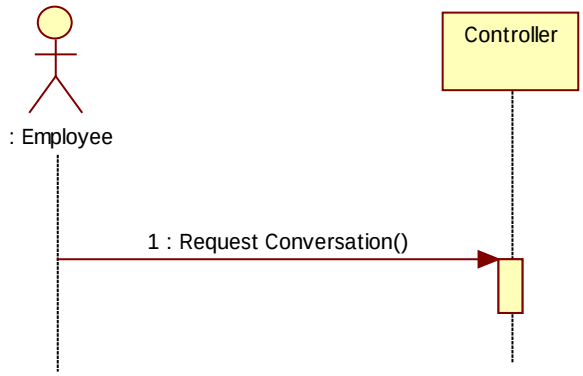

14. Make Coffee

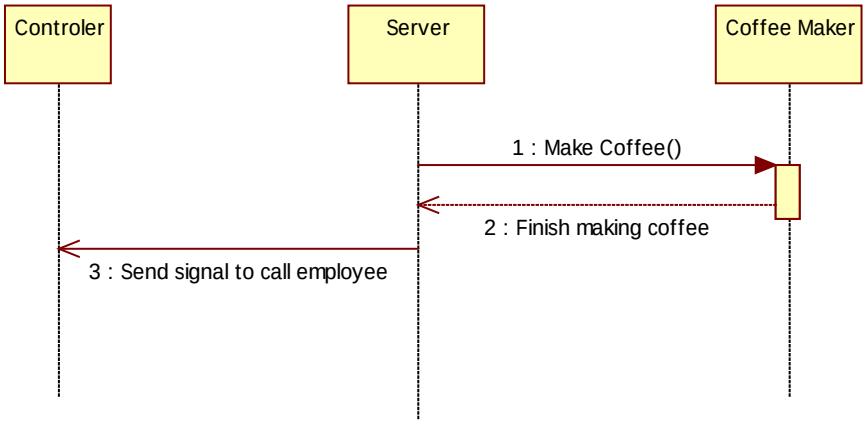

15. Call Employee(of system)

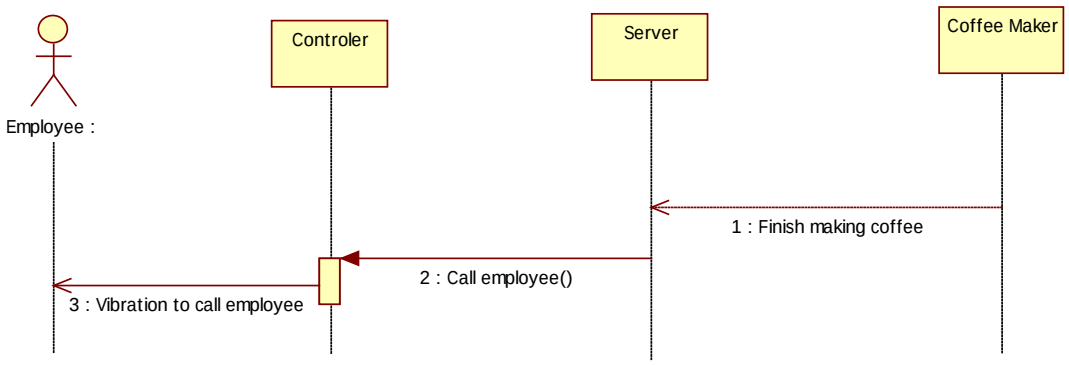

16. Manager Call(of system)

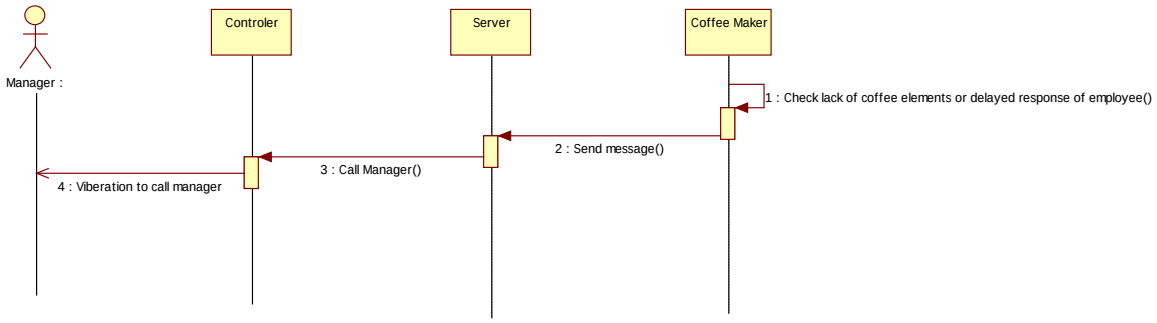

17. Order Inquiry

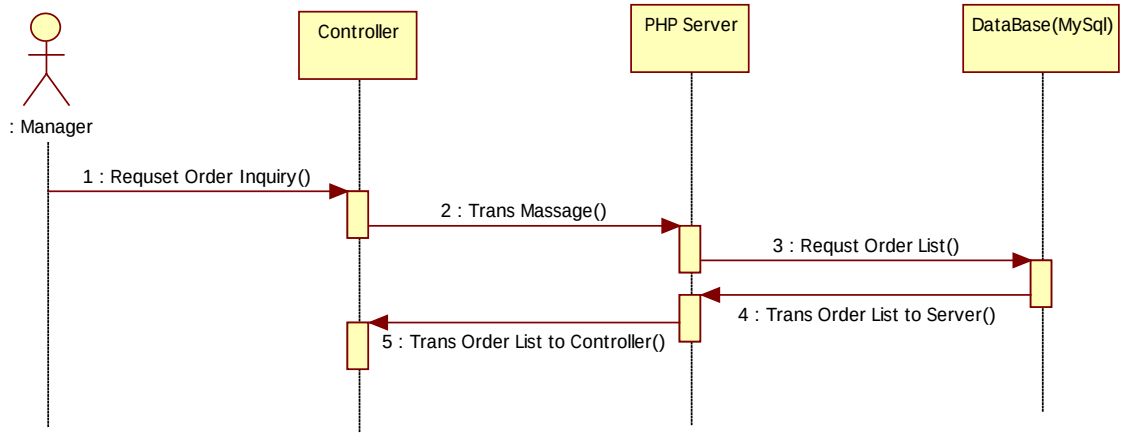

18. Employee Call

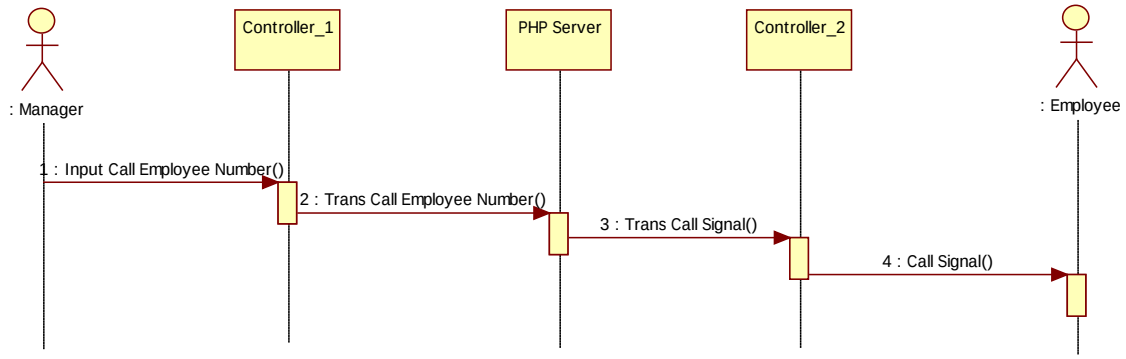

19. Save Order List

- This use-case is included use-case "Sequence Order List".

2136. Define Operation Contracts

Use Case	Name of Actor-Activated Event	System Operations
1. Add Employee	1. input Person Data()	1. inputAddEmployee ()
	2. Trans Person Data()	2. transAddEmployee ()
2. Delete Employee	1. Input Delete ID()	3. inputDeleteEmployee ()
	2. Trans ID()	4. transDeleteEmployee ()
3. Modify Employee	1. Input Modify Person Data()	5. inputModifyEmployee ()
	2. Trans Modify Person Data()	6. transModifyEmployee ()
4. Add Recipe	1. input Recipe()	7. inputAddRecipe()
	2. Trans Recipe()	8. transAddRecipe()
5. Delete Recipe	1. Input Delete Recipe()	9. inputDeleteRecipe()
	2. Trans Delete Recipe()	10. transDeleteRecipe()
6. Modify Recipe	1. Input Modify Recipe()	11. inputModifyRecipe()
	2. Trans Modify Recipe()	12. transModifyRecipe()
7. Add Table	1. input Table Data()	13. inputAddTable()
	2. Trans Table Data()	14. trnasAddTable()
8. Delete Table	1. Input Delete Table()	15. inputDeleteTable()
	2. Trans Delete Table()	16. transDeleteTable()
9. Modify table	1. Input Modify Table()	17. inputModifyTable()
	2. Trans Modify Table()	18. transModifyTable()
10. Order Coffee	1. RequestOrder()	19. SaveOrder()
	2. RequestCoffeeRecipe()	20. RequestRecipe()
	3. Make OrderClass and regist recipe()	21. MokeOrderClass()

	4. Order Cancel	22. CancelOrder()
11. Sequence Order List	1. give priority numbering to order class()	23. SetPriority()
	2. Save order class()	24. SaveOrder()
12. Voice Recognition	1. Request Recognition()	25. VoiceRecognition()
13. Voice Conversation	1. Request Conversation()	26. VoiceConversation()
14. Make Coffee	1. Make Coffee()	27. MakeCoffee()
15. Call Employee(of system)	1. Call employee()	28. CallEmployee()
16. Manager Call(of system)	1. Send message()	29. SendMessage()
	2. Call manager()	30. CallManager()
17. Order Inquiry	1. Request Order Inquiry()	31. RequestOrderInquiry()
	2. Trans Massage()	32. TransMassage()
	3. Request Order List()	33. RequestOrderList()
	4. Trans Order List to Server()	34. TransOrderListServer()
	5. Trans Order List to Controller()	35. TransOrderListController()
18. Call Employee(of manager)	1. Input Call Employee Number()	36. InputCallNumber()
	2. Trans Call Employee Number()	37. TransCallNumber()
	3. Trans Call Signal()	38. TransCallSignal()
	4. Call Signal()	39. CallSignal()
19. Save Order List	N/A	N/A

1. Add Employee

Name	inputAddEmployee ()
Responsibilities	Insert Add Employee info
Type	
Cross References	System Function: R1.1.1 Use-Case : "Add Employee "
Notes	
Exceptions	
Output	
Pre-conditions	Already don't exist same Employee information
Poste-conditions	

Name	transAddEmployee ()
Responsibilities	trans Add Employee info to server
Type	
Cross References	System Function: R1.1.1 Use-Case : "Add Employee "
Notes	
Exceptions	
Output	
Pre-conditions	Already don't exist same Employee information
Poste-conditions	

2. Delete Employee

Name	inputDeleteEmployee ()
Responsibilities	Insert Delete Employee info
Type	
Cross References	System Function: R1.1.2 Use-Case : "Delete Employee "
Notes	
Exceptions	
Output	
Pre-conditions	Already exist Employee information
Poste-conditions	

Name	transDeleteEmployee ()
Responsibilities	trans Delete Employee info to server
Type	
Cross References	System Function: R1.1.2 Use-Case : "Delete Employee "
Notes	
Exceptions	
Output	
Pre-conditions	Already exist Employee information
Poste-conditions	

3. Modify Employee

Name	inputModifyEmployee ()
Responsibilities	Insert modify Employee info
Type	
Cross References	System Function: R1.1.3 Use-Case : "Modify Employee "
Notes	
Exceptions	
Output	
Pre-conditions	Already exist Employee information
Poste-conditions	

Name	transModifyEmployee ()
Responsibilities	trans modify Employee info to server
Type	
Cross References	System Function: R1.1.3 Use-Case : "Modify Employee "
Notes	
Exceptions	
Output	
Pre-conditions	Already exist Employee information
Poste-conditions	

4. Add Recipe

Name	inputAddRecipe ()
Responsibilities	Insert Add Recipe info
Type	
Cross References	System Function: R1.2.1 Use-Case : "Add Recipe "
Notes	
Exceptions	
Output	
Pre-conditions	Already don't exist same Recipe information
Poste-conditions	

Name	transAdd Recipe ()
Responsibilities	trans Add Recipe info to server
Type	
Cross References	System Function: R1.21 Use-Case : "Add Recipe "
Notes	
Exceptions	
Output	
Pre-conditions	Already don't exist same Table information
Poste-conditions	

5. Delete Recipe

Name	inputDeleteRecipe ()
Responsibilities	Insert Delete Recipe info
Type	
Cross References	System Function: R1.2.2 Use-Case : "Delete Recipe "
Notes	
Exceptions	
Output	
Pre-conditions	Already exist Recipe information
Poste-conditions	

Name	transDelete Recipe ()
Responsibilities	trans Delete Recipe info to server
Type	
Cross References	System Function: R1.2.2 Use-Case : "Delete Recipe "
Notes	
Exceptions	
Output	
Pre-conditions	Already exist Recipe information
Poste-conditions	

6. Modify Recipe

Name	inputModifyRecipe ()
Responsibilities	Insert modify Recipe info
Type	
Cross References	System Function: R1.2.3 Use-Case : "Modify Recipe "
Notes	
Exceptions	
Output	
Pre-conditions	Already exist Recipe information
Poste-conditions	

Name	transModifyRecipe ()
Responsibilities	trans modify Recipe info to server
Type	
Cross References	System Function: R1.2.3 Use-Case : "Modify Recipe "
Notes	
Exceptions	
Output	
Pre-conditions	Already exist Recipe information
Poste-conditions	

7. Add table

Name	inputAddTable()
Responsibilities	Insert Add table info
Type	
Cross References	System Function: R1.3.1 Use-Case : "Add Table"
Notes	
Exceptions	
Output	
Pre-conditions	Already don't exist same Table information
Poste-conditions	

Name	transAddTable()
Responsibilities	trans Add table info to server
Type	
Cross References	System Function: R1.3.1 Use-Case : "Add Table"
Notes	
Exceptions	
Output	
Pre-conditions	Already don't exist same Table information
Poste-conditions	

8. Delete table

Name	inputDeleteTable()
Responsibilities	Insert Delete table info
Type	
Cross References	System Function: R1.3.2 Use-Case : "Delete Table"
Notes	
Exceptions	
Output	
Pre-conditions	Already exist Table information
Poste-conditions	

Name	transDeleteTable()
Responsibilities	trans Delete table info to server
Type	
Cross References	System Function: R1.3.2 Use-Case : "Delete Table"
Notes	
Exceptions	
Output	
Pre-conditions	Already exist Table information
Poste-conditions	

9. Modify table

Name	inputModifyTable()
Responsibilities	Insert modify table info
Type	
Cross References	System Function: R1.3.3 Use-Case : "Modify Table"
Notes	
Exceptions	
Output	
Pre-conditions	Already exist Table information
Poste-conditions	

Name	transModifyTable()
Responsibilities	trans modify table info to server
Type	
Cross References	System Function: R1.3.3 Use-Case : "Modify Table"
Notes	
Exceptions	
Output	
Pre-conditions	Already exist Table information
Poste-conditions	

10. Order Coffee

Name	SaveOrder()
Responsibilities	Save order to server
Type	Server
Cross References	System functions : R2.1 Use Case : "Order Coffee"
Notes	
Exceptions	N/A
Output	Results from saving order
Pre-conditions	-
Post-conditions	A order saved in server

Name	RequestRecipe()
Responsibilities	Request recipe from DB
Type	Database
Cross References	System functions : R2.1 Use Case : "Order Coffee"
Notes	
Exceptions	N/A
Output	Results from request recipe
Pre-conditions	Recipe information should be entered
Post-conditions	Recipe is loaded from server.

Name	MakeOrderClass()
Responsibilities	Make order class and register recipe, table and employee to the order class
Type	Server
Cross References	System functions : R2.1 Use Case : "Order Coffee"
Notes	
Exceptions	If coffee material is little or some problem is caused, order is canceled.
Output	Resulting from making order class.
Pre-conditions	-
Post-conditions	Order class is saved in server. Several information are saved in order class. (recipe, table, employee)

Name	CancelOrder()
Responsibilities	Cancel order
Type	Controller
Cross References	System functions : R2.1 Use Case : "Order Coffee"
Notes	
Exceptions	N/A
Output	Result from canceling order.
Pre-conditions	Order should exist in server.
Post-conditions	Order class is deleted.

11. Sequence Order List

Name	SetPriority()
Responsibilities	Set priority to order class.
Type	Server
Cross References	System functions : R2.2 Use Case : "Sequence Order List"
Notes	
Exceptions	N/A
Output	Information of priority order class.
Pre-conditions	Order should exist in server.
Post-conditions	Order class has set priority.

Name	SaveOrder()
Responsibilities	Save priority order class in DB
Type	Database
Cross References	System functions : R2.2 Use Case : "Sequence Order List"
Notes	
Exceptions	N/A
Output	Result from saving order class in DB
Pre-conditions	Order should exist in server.
Post-conditions	Order class has saved in DB

12. Voice Recognition

Name	VoiceRecognition()
Responsibilities	Perform voice recognition function.
Type	Controller
Cross References	System functions : R2.3 Use Case : "Voice Recognition"
Notes	
Exceptions	If operation doesn't recognize, controller retry this operation.
Output	Result from recognizing voice.
Pre-conditions	-
Post-conditions	-

13. Voice Conversation

Name	VoiceConversation()
Responsibilities	Play embeded voice for customer
Type	Controller
Cross References	System functions : R2.4 Use Case : "Voice Conversation"
Notes	
Exceptions	N/A
Output	Result from playing conversation.
Pre-conditions	Conversation should be saved.
Post-conditions	-

14. Make Coffee

Name	MakeCoffee()
Responsibilities	Start making coffee dependent ordering priority in coffee maker.
Type	CoffeeMaker
Cross References	System functions : R3.1 Use Case : "Make Coffee"
Notes	
Exceptions	If coffee material is little, call manager.
Output	Result from making coffee.
Pre-conditions	-
Post-conditions	-

15. Call Employee(of system)

Name	CallEmployee()
Responsibilities	Call employee by system.
Type	Controller
Cross References	System functions : R3.2 Use Case : "Call Employee(of system)"
Notes	
Exceptions	N/A
Output	Result from calling employee
Pre-conditions	Information of employee should be entered.
Post-conditions	-

16. Manager Call(of system)

Name	SendMessage()
Responsibilities	If coffee material is lack or serving is delayed, coffee maker send message to server.
Type	Server
Cross References	System functions : R3.3 Use Case : "Manager Call(of system)"
Notes	
Exceptions	N/A
Output	Result from sending message.
Pre-conditions	Information of manager should be entered. Coffee material is lack or serving is delayed.
Post-conditions	When coffee material is lack or serving is delayed.

Name	CallManager ()
Responsibilities	If coffee material is lack or serving is delayed, server call manager.
Type	Controller
Cross References	System functions : R3.3 Use Case : "Manager Call(of system)"
Notes	
Exceptions	N/A
Output	Result from calling manager.
Pre-conditions	Information of manager should be entered. When coffee material is lack or serving is delayed.
Post-conditions	-

17. Order Inquiry

Name	Request Order Inquiry()
Responsibilities	Request to show the order list each employee.
Type	Controller
Cross References	System Function : R4.1 Use Case : Order Inquiry
Notes	
Exceptions	N/A
Output	Trans this message to PHP server.
Pre-conditions	Manager should be login this system.
Post-conditions	Controller has to trans PHP server, and waiting for data get PHP server.

Name	TransMassage()
Responsibilities	Controller has to sending massage to PHP server.
Type	PHP Server
Cross References	System Function : R4.1 Use Case : Order Inquiry
Notes	
Exceptions	N/A
Output	Request order list to database.
Pre-conditions	Controller is linked PHP server.
Post-conditions	Continue access PHP server and wait response.

Name	RequestOrderList()
Responsibilities	Send to order list to PHP server.
Type	Database
Cross References	System Function : R4.1 Use Case : Order Inquiry
Notes	
Exceptions	N/A
Output	Database trans order list to PHP server.
Pre-conditions	Controller send massage for request order list.
Post-conditions	PHP server has to access database, and wait response database.

Name	TransOrderListServer()
Responsibilities	Order list should be trans, if don't have any data.
Type	PHP Server
Cross References	System Function : R4.1 Use Case : Order Inquiry
Notes	
Exceptions	N/A
Output	PHP server is received the order list.
Pre-conditions	Database is requested order list by PHP server
Post-conditions	Database is waiting another event.

Name	TransOrderListController()
Responsibilities	PHP server trans order list to manager controller.
Type	Controller
Cross References	System Function : R4.1 Use Case : Order Inquiry
Notes	
Exceptions	N/A
Output	Controller received the order list.
Pre-conditions	Controller has to access the PHP server.
Post-conditions	PHP server is waiting another request.

18. Call Employee(of manager)

Name	InputCallNumber()
Responsibilities	Manager entered number and this number is trans to PHP server.
Type	Controller_1
Cross References	System Function: R3.2 Use Case : Employee Call
Notes	
Exceptions	N/A
Output	Controller_1 is send employee number to destination controller.
Pre-conditions	Manager should be login this system.
Post-conditions	Controller_1 is send number to PHP server.

Name	TransCallNumber()
Responsibilities	Controller_1 trans employee number to PHP server.
Type	PHP Server
Cross References	System Function: R3.2 Use Case : Employee Call
Notes	
Exceptions	N/A
Output	PHP server trans calling signal to destination controller.
Pre-conditions	Controller_1 is linked PHP server.
Post-conditions	Controller_1 is waiting another event.

Name	TransCallSignal()
Responsibilities	PHP server trans calling signal to destination employee controller.
Type	Controller_2
Cross References	System Function: R3.2 Use Case : Employee Call
Notes	
Exceptions	N/A
Output	Controller_2 is received calling signal.
Pre-conditions	Controller_2 is linked PHP server.
Post-conditions	PHP server is waiting another request.

Name	CallSignal()
Responsibilities	Controller_2 is noticed to employee.
Type	Employee
Cross References	System Function: R3.2 Use Case : Employee Call
Notes	
Exceptions	N/A
Output	Employee realized signal to manager.
Pre-conditions	Employee should be take the controller.
Post-conditions	Controller is waiting another event. Employee go to manager.

2137. Define State Diagrams

1. State Diagrams for <Table>

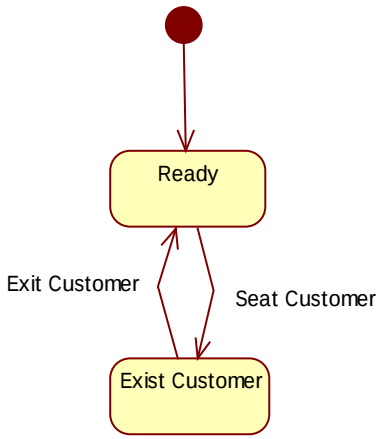
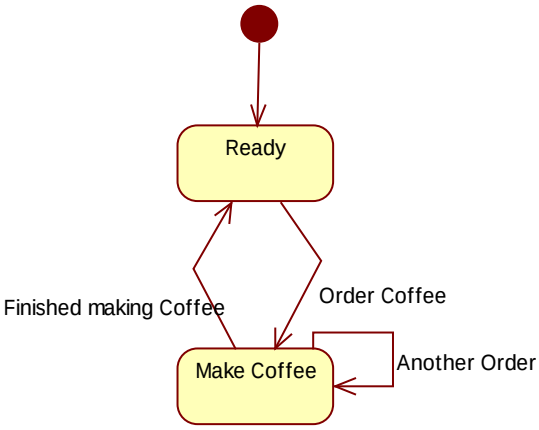
2. State Diagrams for <Coffee Maker>